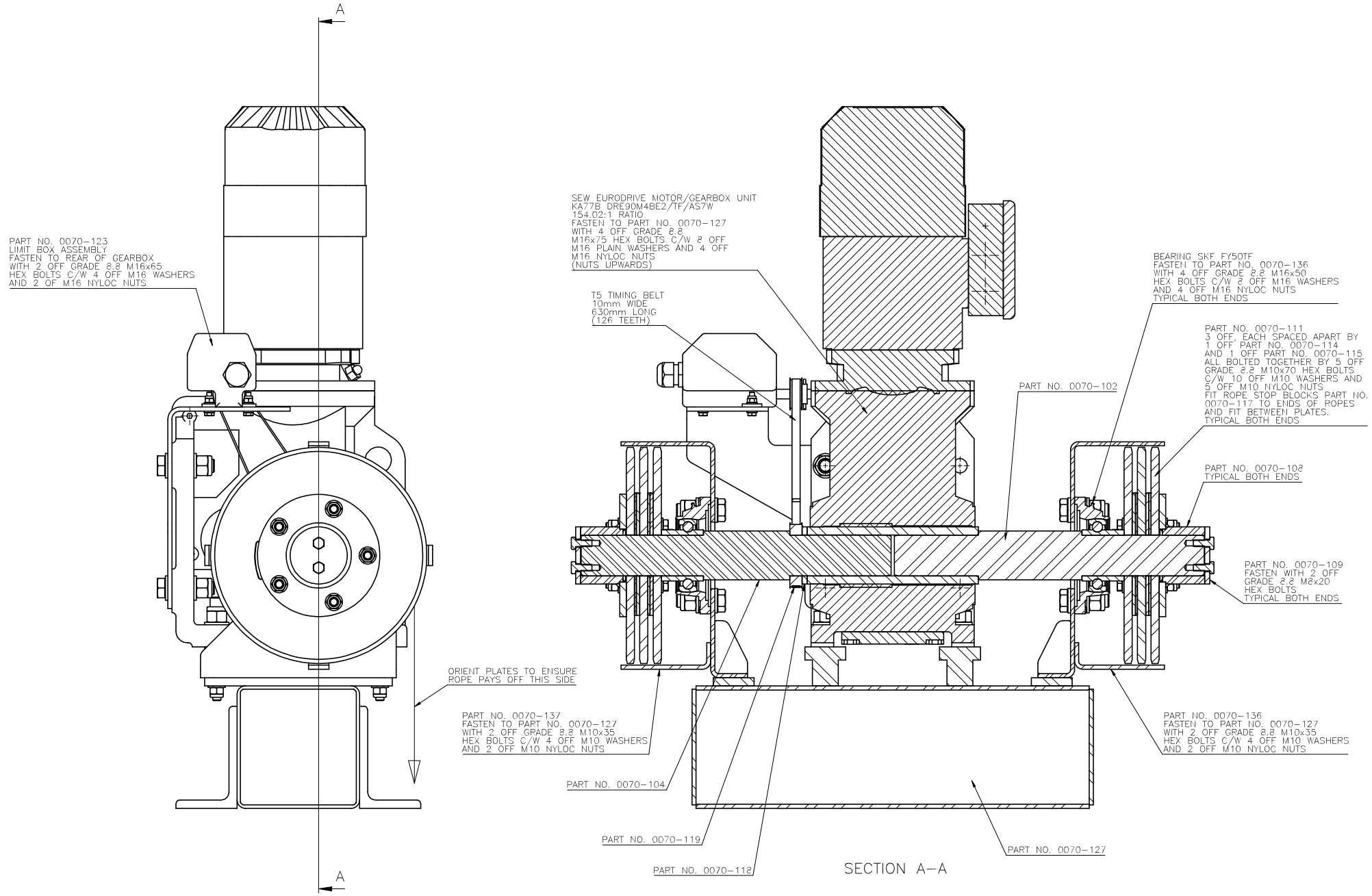

2 OFF REQUIRED